Practice Questions

Candidate: Dunkan Gibson (dunkan.gibson)
Date: 8/24/2021 8:09:40 pm • Time spent: 03:55

Score: 93% Passing Score: 80%

Question 1: ✔ Correct

You are working with an existing fiber optic installation in your building. You want to know the length of each cable that runs through the walls.

Which tool should you use?

- Multimeter
- Smartjack
- ➡ OTDR
- Toner probe

EXPLANATION

An optical time domain reflector (OTDR) sends light pulses on a cable to discover information about the cable. The results of this test can be used to:

- Estimate the length of a wire.
- Measure the cable impedance.
- Identify locations of splices and connectors on the wire.
- Identify shorts and open circuits, and the location of the fault.

A TDR performs the same tests on copper cables.

Use a toner probe to locate the end of a wire from a wall jack to the punch down block. Use a multimeter to measure the electrical properties of a device, such as voltage, amps, and resistance. A *smart jack* is a special loopback plug installed at the demarcation point for a WAN service. Technicians at the central office can send diagnostic commands to the smart plug to test connectivity between the central office and the demarc.

REFERENCES

LabSim for Network Pro, Section 2.5.

Question 2: ✔ Correct

You manage a network that uses 1000BaseT Ethernet. You find that one device communicates on the network at only 100 Mbps.

Which tool should you use to test the drop cable and the connection to the network?

- ➡ Certifier
- Toner probe
- TDR
- Multimeter
- Cable tester

EXPLANATION

A cable certifier is a multi-function tool that verifies or validates that a cable or an installation meets the requirements for a specific architecture implementation. For example, you would use a certifier to verify that a specific drop cable meets the specifications for 1000BaseT networking.

A cable tester verifies that the cable can carry a signal from one end to the other and that all wires are in their correct positions. A toner probe is two devices used to trace the end of a wire from a known endpoint into the termination point in the wiring closet. A time domain reflector (TDR) measures the length of a cable or to identify the location of a fault in the cable. A multimeter measures the electrical properties of a device, including voltage, amps, and resistance.

REFERENCES

LabSim for Network Pro, Section 2.5.

Question 3: ✔ Correct

You have been asked to document the wiring in your building. You would like to identify the length of each Cat5 cable to verify that it meets Ethernet standards. You need to identify the length of the cables, but most cables run through walls and ceilings, making them difficult to trace.

Which tool should you use?

- Smartjack
- OTDR
- Butt set
- ➡ TDR
- Toner probe

EXPLANATION

A TDR is a special device that sends electrical pulses on a wire in order to discover information about the cable. The TDR measures impedance discontinuities; the echo received on the same wire in response to a signal on the wire. The results of this test can be used to:

- Estimate the length of a wire.
- Measure the cable impedance.
- Identify the locations of splices and connectors on the wire.
- Identify shorts, open circuits, and the location of the fault.

An optical time domain reflector (OTDR) performs the same function for fiber optic cables using light waves. A toner probe is two devices used to trace the end of a wire from a known endpoint into the termination point in the wiring closet. A butt set (also called a lineman's handset) is a device used to test analog telephone installations. The butt set includes an earpiece, mouthpiece, dialing interface, and various connectors. A smartjack is a special loopback plug installed at the demarcation point for a WAN service. Technicians at the central office can send diagnostic commands to the smart plug to test connectivity between the central office and the demarc.

REFERENCES

LabSim for Network Pro, Section 2.5.

Question 4: ✔ Correct

You want to measure the voltage, amps, and ohms of various devices.

Which tool should you use?

- Butt set
- Toner probe
- Certifier
- Voltage event recorder
- ➡ Multimeter

EXPLANATION

A multimeter is a device that tests various electrical properties. For example, most multimeters can measure:

- AC and DC voltage
- Current (amps)
- Resistance (ohms)
- Capacitance
- Frequency

A voltage event recorder tracks voltage conditions on a power line. Basic recorders keep track of the occurrence of under or over voltage conditions, while more advanced devices track conditions over time and create a graph, saving data from a program running on a computer.

A butt set (also called a lineman's handset) is a device used to test analog telephone installations. The butt set includes an earpiece, mouthpiece, dialing interface, and various connectors. A toner probe is two devices used to trace the end of a wire from a known endpoint into the termination point in the wiring closet. A cable certifier is a multi-function tool that verifies or validates that a cable or an installation meets the requirements for a specific architecture implementation.

REFERENCES

LabSim for Network Pro, Section 2.5.

Question 5: ✔ Correct

You have a cable internet connection at home. The installer had connected the router near the outside wall of your house with RG6 cable.

You move the cable router a distance of 50 meters using RG8 cables and special connector adapters.

Which condition are you most likely to experience?

- NEXT
- Attenuation
- FEXT
- EMI
- ➡ Echo

EXPLANATION

An impedance mismatch (manifested by echo) occurs when you connect cables and devices that have a different impedance (resistance) rating. Impedance is mostly a factor in coaxial cables used for networking. Be sure to choose cable with the correct rating (50 or 75 ohm) based on the network type, and do not mix cables with different ratings. RG6 cables have a rating of 75 ohms, while RG-8 cables have a rating of 50 ohms.

Attenuation is the loss of signal strength from one end of a cable to the other. Electromagnetic interference (EMI) is interference that comes from an external source. Common sources of EMI include nearby generators, motors (such as elevator motors), radio transmitters, welders, transformers, and fluorescent lighting.

Near-end crosstalk (NEXT) is crosstalk measured on the same end as the transmitter. For example, when a signal is sent on one wire, near-end crosstalk measures the interference on another wire at the same connector near the source of the original signal. Far-end crosstalk (FEXT) is crosstalk measured on the opposite end from the transmitter. For example, when a signal is sent on one wire, far-end crosstalk measures the interference on another wire at the opposite end from the source signal.

REFERENCES

LabSim for Network Pro, Section 2.5.

Question 6: ✔ Correct

You use Cat5e twisted pair cable on your network. Cables are routed through walls and the ceiling.

A user puts a screw in the wall to hang a picture and pierces the cable so that a signal sent on pin 1 arrives on the cable connected to pin 7.

Which term describes this condition?

- ➡ Short circuit
- Split pair
- Attenuation
- Open circuit
- Crosstalk

EXPLANATION

An electrical short occurs when electrical signals take a path other than the intended path. In the case of twisted pair wiring, a short means that a signal sent on one wire might arrive on a different wire. Shorts are caused by worn wire jackets, crushed wires that touch, and pierced wire that touches metal. If an open circuit is a cut in the wire that prevents the original signal from reaching the end of the wire, you will have a short.

If you have a short, the signal travels a different path. If you have an open circuit, the signal does not travel anywhere (electricity cannot flow because the path is disconnected).

Crosstalk is interference that is caused by signals within the twisted pairs of wires. Attenuation is the loss of signal strength from one end of a cable to the other caused by distance. A split pair condition is where a single wire in two different pairs is reversed at both ends. For example, instead of matching the green and green/white wires in pins 1 and 2, you swap the solid green wire with the solid brown wire.

REFERENCES

LabSim for Network Pro, Section 2.5.

Question 7: ✔ Correct

Users report that the internet is no longer accessible. You suspect that the line connecting your building to the internet is not working properly.

Which of the following allows the service provider to remotely test the local loop?

- Horizontal cross connect
- Demarc
- Loopback plug
- ➡ Smartjack
- Demarc extension

EXPLANATION

A smartjack is a special loopback plug installed at the demarcation point for a WAN service. Technicians at the central office can send diagnostic commands to the smart plug to test connectivity between the central office and the demarc.

A smartjack is similar to a loopback plug; however, the loopback plug must be manually inserted into a jack to test the line, while the smartjack is a special plug that includes loopback support and can be used to test the local loop remotely. Your provider's technicians can use a smartjack to diagnose the local loop without visiting your location.

The demarcation point (demarc) is the line that marks the boundary between the telco equipment and the private network or telephone system. A demarc extension extends the demarcation point from its original location to another location within the building. A horizontal cross connect connects wiring closets on the same floor.

REFERENCES

LabSim for Network Pro, Section 2.5.

Question 8: ✔ Correct

Which type of polish grade uses green-colored connectors to help you keep from using the wrong connector type?

- Super Physical Contact (SPC)
- Ultra Physical Contact (UPC)
- Physical Contact (PC)
- ➡ Angled Physical Contact (APC)

EXPLANATION

Angled Physical Contact (APC) connecters are colored green to differentiate them from non-APC connectors.

Physical Contact (PC), Super Physical Contact (SPC), and Ultra Physical Contact (UPC) connectors do not use any specific coloring designations.

REFERENCES

LabSim for Network Pro, Section 2.5.

Question 9: ✔ Correct

You need to replace a fiber optic cable that is connecting two switches together. You inspect the existing fiber cable and determine that it uses LC connectors. You also notice the cable's ferrule has a slight slant to it.

Which polish grade should you use to replace the existing cable?

- ➡ Angled Physical Contact polish
- Ultra Physical Contact polish
- Physical Contact polish
- Flat Physical Contact polish

EXPLANATION

A slight slant to the fiber ferrule indicates an Angled Physical Contact (APC) polish. Using a non-angled connector will cause excessive insertion loss.

A Physical Contact (PC) polish is polished with a slight curvature. An Ultra Physical Contact (UPC) polish uses a higher grade polish and is slightly more curved than a PC polish. A Flat Physical Contact connector has little to no curvature and suffers from the most insertion loss.

REFERENCES

LabSim for Network Pro, Section 2.5.

Question 10: ✔ Correct

You've connected a cable certifier to an RJ45 wall jack, and the output shown below is displayed on the device. What does this output indicate? (Select two.)

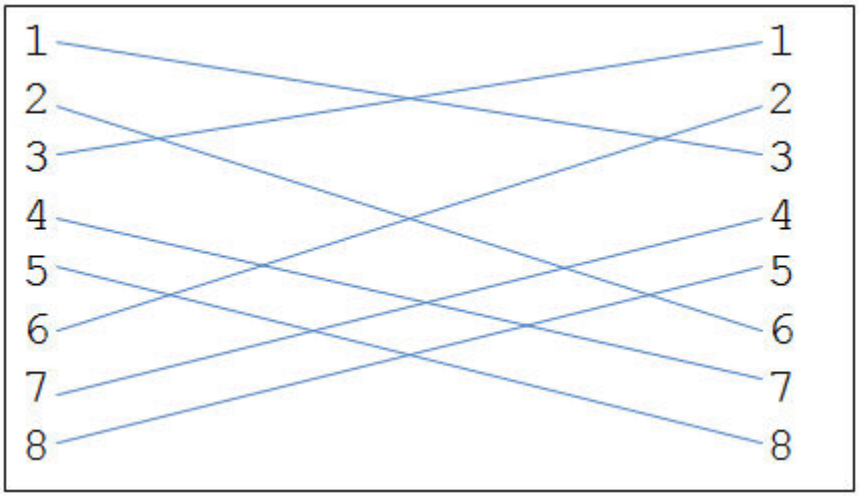

- [x] The cable is functioning correctly.
- [x] This is a crossover cable.
- [ ] There are multiple shorts on this cable.
- [ ] This is a straight-through cable.
- [ ] There are multiple open pins on this cable.

EXPLANATION

In this example, the cable being tested is a correctly wired crossover cable.

Output with x characters between pins indicates that they are shorted. Straight-through connections are displayed using - characters in the output of the cable certifier. Open connections are displayed with no characters or lines between the pin numbers.

REFERENCES

LabSim for Network Pro, Section 2.5.

Question 11: ✔ Correct

Consider the 850 nm multimode fiber optic cable shown below. How much loss can you expect between the transmitter and the receiver?

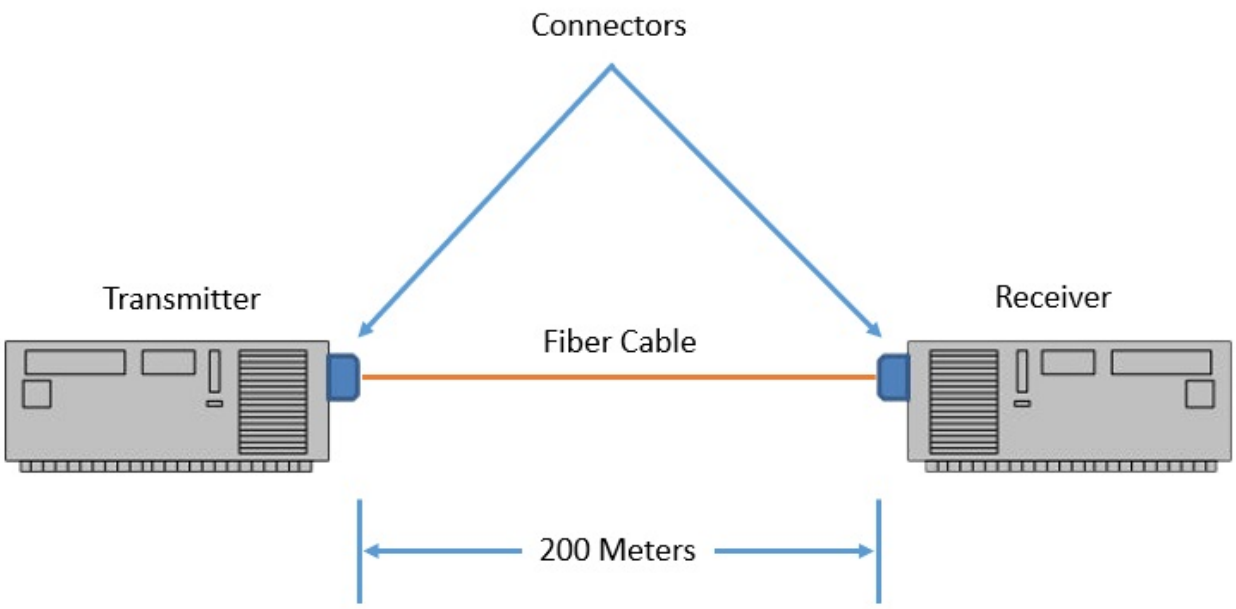

- -0.3 dB
- ➡ -1.2 dB
- -0.9 dB
- -0.6 dB

EXPLANATION

When calculating a loss budget for a segment of fiber optic cable, use the following guidelines:

- Connectors = 0.3 dB loss each
- Splices = 0.3 dB loss each
- Multimode cabling = 3 dB loss per 1000 meters (850 nm) or 1 dB loss per 1000 meters (1300 nm)
- Single mode cabling = 0.5 dB loss per 1000 meters (1310 nm) or 0.4 dB loss per 1000 meters (1550 nm)

In this scenario, there are two connectors (0.3 dB loss each) and 200 meters of 850 nm multimode cable (.2 * 3 dB) for a total expected loss of 1.2 dB. Note that dirty or poorly polished connectors can dramatically increase the amount of loss in the cable.

REFERENCES

LabSim for Network Pro, Section 2.5.

Question 12: ✔ Correct

You are troubleshooting a connectivity problem in which one client system is unable to connect to a server. Both the server and client system are connected to the same Ethernet network switch. No other users have complained of a problem, and you suspect that faulty network cabling might be to blame.

Which of the following troubleshooting steps are you most likely to perform first?

- Use a wire crimper to ensure that the cable ends are still fully attached to the cable in two places: between the computer and the network switch, and between the network switch and the server system.
- ➡ Use a cable tester to test the cable between the computer system and the network switch.
- Use a tone generator to test the network cables between the computer and the network switch and between the network switch and the server system.
- Use a punch down tool to test the network cable between the computer system and the network switch.
- Use a cable tester to test the cable between the network switch and the server system.

EXPLANATION

A cable tester is a hardware device that can be used to verify the correct operation of network cabling. In this scenario, because no other systems are having problems connecting to the server, you are most likely to use the cable tester to check the cable between the client system and the network switch.

A punch down tool is used to connect network cabling to physical end points such as sockets and demarcation points. You would not use it to test a suspected faulty cable. A tone generator is used to locate network cables. Successful use of a tone generator does not necessarily indicate that the cable is functioning correctly. You might use a wire crimper to repair a cable, but you would not use it to locate a fault cable.

REFERENCES

LabSim for Network Pro, Section 2.5.

Question 13: ✔ Correct

While viewing the status of the interfaces on a Cisco switch, you see an abnormally large number of CRC errors on one interface. This interface is connected to a user's workstation located in a cubicle on the second floor.

What could cause this to happen?

- Two hosts on the network with the same MAC address.
- ➡ A strong EMI emitter near the cable run connected to that interface.
- Collisions between two or more network hosts.
- An incorrect subnet mask configured on the workstation.

EXPLANATION

CRC errors indicate that a frame has been corrupted in transit. The CRC counter displays the number of frames received by the switch that did not pass the FCS check. On a hub-based Ethernet network, these errors are usually caused by collisions. However, because a switch is being used in this scenario, collisions can't occur. Therefore, the most likely cause is EMI or cross-talk on the UTP cabling, which can corrupt frames transmitted on the wire and cause a CRC error.

CRC errors are almost always Layer 1 errors. Duplicate MAC addresses would result in a Layer 2 error. Incorrect protocol or IP addressing configurations would result in Layer 3 errors.

REFERENCES

LabSim for Network Pro, Section 2.5.

Question 14: ✔ Correct

You are building a new network for a small startup financial services company. Security is paramount, so each organization within the company will have their own network segments separated by routers. Funds are limited, and you have been asked to keep costs to a minimum.

You have acquired a used fiber optic switch and want to use it to create a fiber optic backbone that interconnects all of the routers. You purchased several used multi-mode GBIC modules on eBay that you will install in each router to allow them to connect to the switch.

Both the switch and the GBIC modules use MTRJ connectors. You purchased several used 1-meter multi-mode patch cables from Amazon. But when they arrived, you noticed that they use LC connectors. Fortunately, with some force, you found that you are able to get the LC connectors on the cables to lock into the MTRJ connectors on the GBIC modules and on the switch.

Will this implementation work?

- Yes. All of the requirements for implementing a fiber optic network have been met.
- No. You should use a specialized backbone fiber optic switch to create a backbone network for routers.
- ➡ No. You should purchase patch cables that use MTRJ connectors.
- No. You should use single-mode patch cables to connect a GBIC module to a switch.

EXPLANATION

For light to pass through a fiber optic connector, the fiber within the jack must line up perfectly with the fiber in the connector. Using the wrong connector will result in misaligned fibers. This will disrupt the light signal, even if you are able to successfully lock the connector into the jack. In this scenario, you should purchase patch cables that use MT-RJ connectors.

REFERENCES

LabSim for Network Pro, Section 2.5.

Question 15: ✕ Incorrect

You are building a new network for a small startup financial services company. Security is paramount, so each organization within the company will have its own network segment separated by a router. However, funds are limited, and you have been asked to keep costs to a minimum.

You have acquired a used fiber optic switch and want to use it to create a fiber optic backbone that interconnects all of the routers. You purchased several used single-mode GBIC modules on eBay that you will install in each router to allow them to connect to the switch.

Both the switch and the GBIC modules use MTRJ connectors. You connect each module to the switch with 1-meter multimode patch cables.

Will this implementation work?

- ~~No. You should not use standard fiber optic switches to create a backbone network for routers.~~
- No. You should purchase fiber optic equipment that use FC connectors.
- Yes,. All of the requirements for implementing a fiber optic network have been met.
- ➡ No. You shouldn't use multi-mode patch cables with single-mode GBIC modules.

EXPLANATION

Some GBIC/SFP modules use multi-mode fiber, while others use single-mode. You must use the correct type of fiber optic cable and connector required by the specific adapter. You cannot mix and match different types of cable. In this scenario, connecting a single-mode GBIC to multi-mode fiber will introduce a catastrophic signal loss of up to 99%.

REFERENCES

LabSim for Network Pro, Section 2.5.

Copyright © 2021 TestOut Corporation All rights reserved.